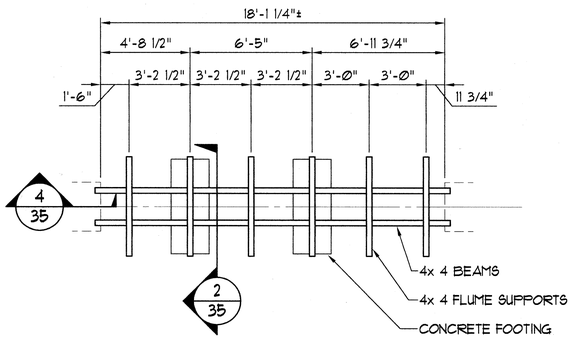


1/35 FRAMING PLAN

SCALE : 1/4" = 1'-Ø"

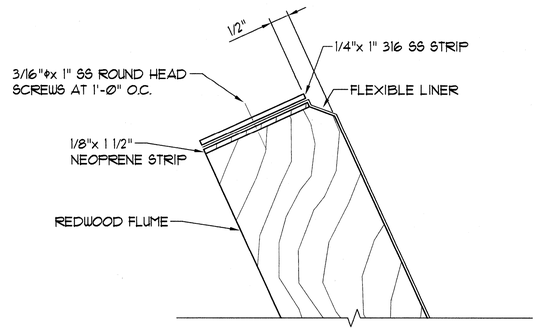


3/35 LINER DETAIL (TOP)

NOT TO SCALE

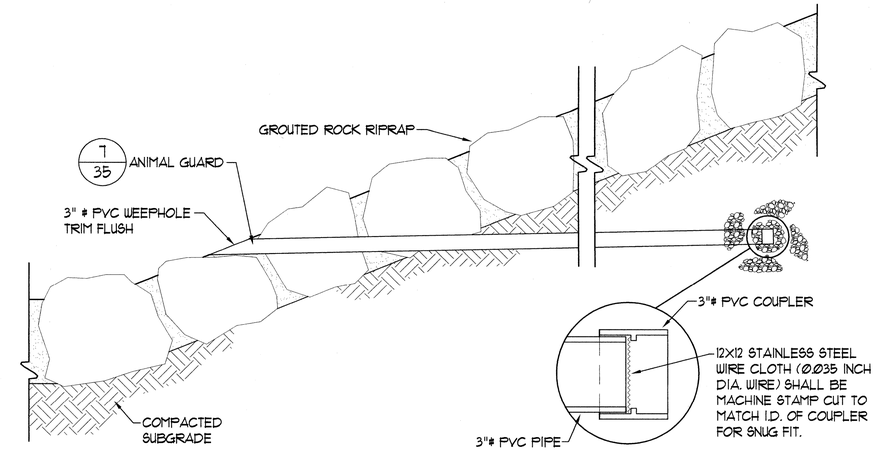


6/35 WEEPHOLE DETAIL △1

NOT TO SCALE

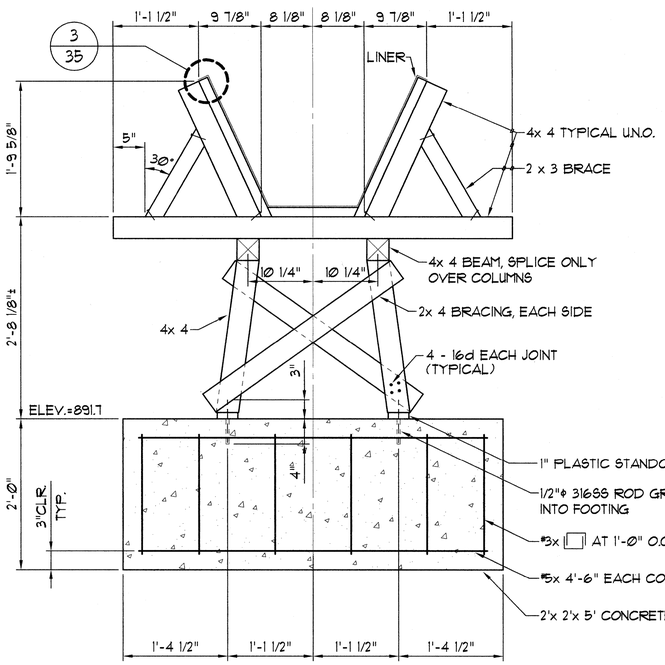


2/35 TYPICAL FLUME SECTION △1

SCALE : 1" = 1'-Ø"

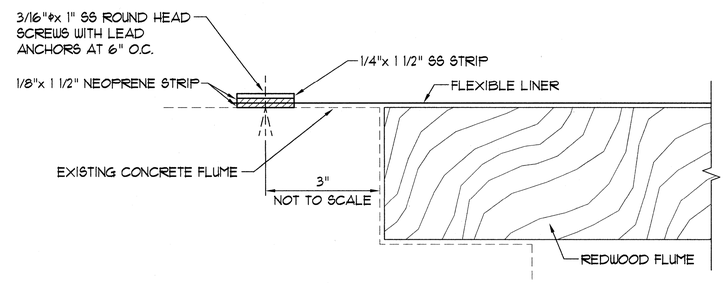


4/35 LINER DETAIL (END)

NOT TO SCALE

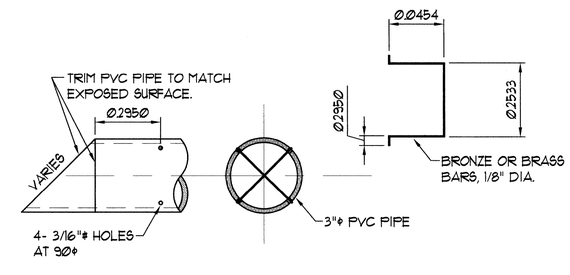


7/35 ANIMAL GUARD

NOT TO SCALE

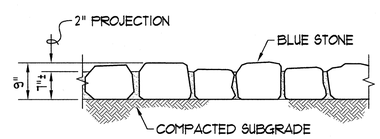


5/35 GROUTED ROCK RIP-RAP DETAIL △1

NOT TO SCALE

APPROVED BY: _____ TITLE _____ TITLE _____

| | | | |
|---|---|---|---|
| DESIGNED | REF | DATE | 2-6-2006 |
| DRAWN | ESI | DATE | 2-6-2006 |
| TRACED | — | DATE | — |
| CHECKED | AY | DATE | 2-6-2006 |

# FLUME #49 – DETAILS

LOWER HAMAKUA DITCH FLUME REPAIR
PHASE IV, FLUME REPLACEMENT
HAMAKUA, ISLAND OF HAWAII, HAWAII

**N.R.C.S. – NATURAL RESOURCES CONSERVATION SERVICE**

RICHARD E. FREY
LICENSED PROFESSIONAL ENGINEER
No. 7813-C
HAWAII, U.S.A.

THIS WORK WAS PREPARED BY ME OR UNDER MY SUPERVISION

BY: _____

DATE : 2-14-2006

APRIL 30, 2006
EXPIRATION DATE OF THE LICENSE

**ENGINEERING SOLUTIONS, INC.**
*Civil / Sanitary / Structural Engineers*

*98-1268 Kaahumanu Street, Suite C-7*
*Pearl City, Hawaii, 96782*

| REV. | DATE | APPROVED |
|---|---|---|
| △1 | 2-14-2006 | |

HAWAII STATE DRAWING NO.
HI-E-08-031

COMPUTER FILE NAME
0428-S-49-DETL.dwg

SHEET 35 OF 35

JOB NO. D0AH04C

DATE : 12/17/05
PLOT SCALE: 1=1
FILE : 0428-S-49-DETL.dwg
JOB No. 0428

PM : RF
OPER : PT/CEC*
REVISED : 02/14/06

22 x 34